RH TRUCKS
trucks, trailers and machinery

Scania G400 6X2 LIFT/STEERING AXLE EURO 5 ONLY 454...
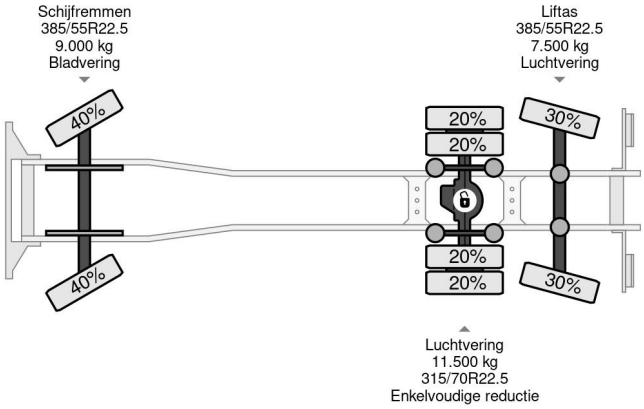
Referentienummer: SC284502