RH TRUCKS
trucks, trailers and machinery

DAF XF 510 6X2 EURO 6 + HIAB 166 HI PRO + REMOTE C...
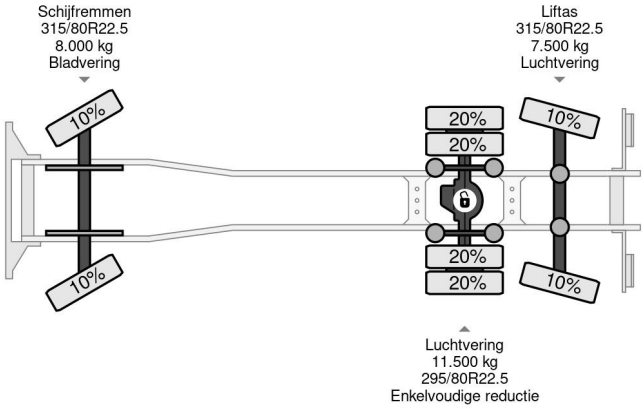
Referentienummer: DA015419-2