RH TRUCKS
trucks, trailers and machinery

Scania R480 6X2 BIG LOAD LIFT DHOLLANDIA ONLY 550.7...
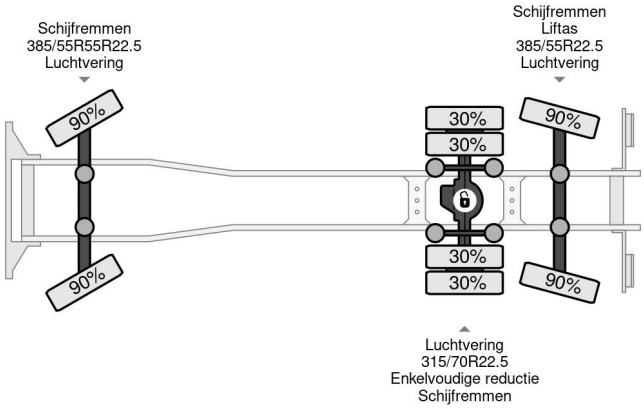
Referentienummer: SC037737-2