RH TRUCKS
trucks, trailers and machinery

Scania P360 6X4 PALFINGER PK 20001-K + REMOTE CON...
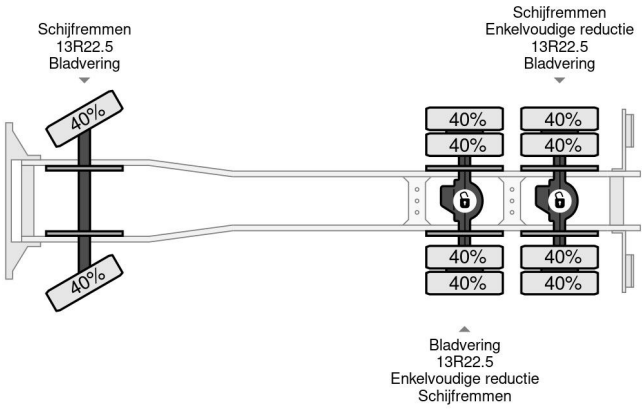
Referentienummer: SC174442-K