RH TRUCKS
trucks, trailers and machinery

Volvo FM 400 6X2 - EURO 3 + 2 LAYERS + LIFT/STEERING...
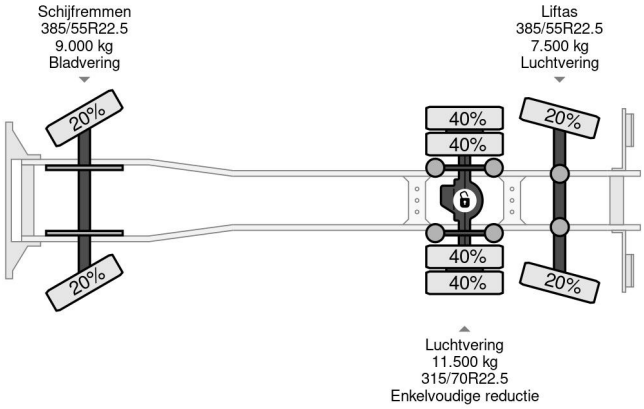
Referentienummer: VO621161